RFMD
rfmd.com

RFSW2044

DC TO 25GHz SPST pHEMT GaAs SWITCH

Package: QFN, 16 pin, 0.8mm x 3mm

Features

- Low Insertion Loss: 2.7dB at 25GHz
- High Isolation: 41dB at 25GHz
- Excellent Return Loss
- 23ns Switching Speed
- GaAs pHEMT Technology
- Compact 3mm x 3mm QFN package

Applications

- Broadband Communications
- Test Instrumentation
- Fiber Optics
- Military
- Aerospace

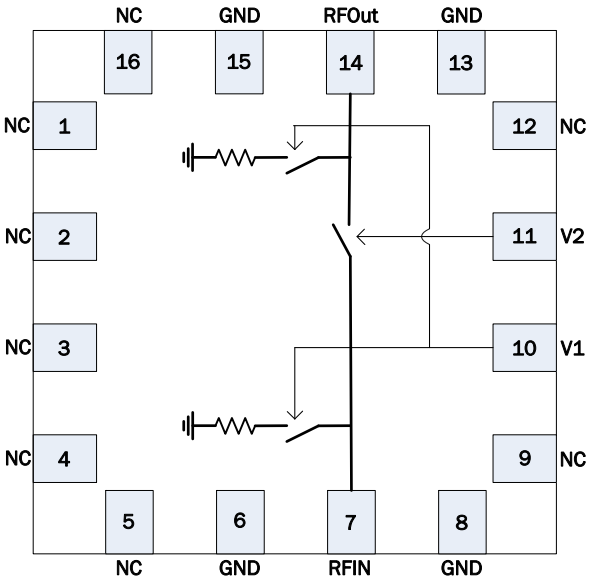

Functional Block Diagram

Product Description

RFMD's RFSW2044 is a broadband absorptive SPST GaAs microwave monolithic integrated circuit (MMIC) switch designed to operate from DC to 25GHz using the RFMD FD05 0.5µm switch process. It features low insertion loss of 2.7dB at 25GHz and high isolation of 41dB at 25GHz while being packaged in a compact low cost 3mm x 3mm QFN package for easy end use assembly. The switch uses complementary control logic of -5/0V and does not require a separate bias supply.

Ordering Information

RFSW2044S2	2-Piece sample bag
RFSW2044SB	5-Piece bag
RFSW2044SQ	25-Piece bag
RFSW2044SR	100 Pieces on 7" reel
RFSW2044TR7	750 Pieces on 7" reel
RFSW2044PCK-410	Evaluation board with 2-piece sample bag

Optimum Technology Matching® Applied

☐ GaAs HBT	☐ SiGe BiCMOS	☑ GaAs pHEMT	☐ GaN HEMT
☐ GaAs MESFET	☐ Si BiCMOS	☐ Si CMOS	☐ BiFET HBT
☐ InGaP HBT	☐ SiGe HBT	☐ Si BJT	

RF MICRO DEVICES®, RFMD®, Optimum Technology Matching®, Enabling Wireless Connectivity™, PowerStar®, POLARIS™ TOTAL RADIO™ and UltimateBlue™ are trademarks of RFMD, LLC. BLUETOOTH is a trademark owned by Bluetooth SIG, Inc., U.S.A. and licensed for use by RFMD. All other trade names, trademarks and registered trademarks are the property of their respective owners. ©2012, RF Micro Devices, Inc.

7628 Thorndike Road, Greensboro, NC 27409-9421 · For sales or technical support, contact RFMD at (+1) 336-678-5570 or customerservice@rfmd.com.

www.BDTIC.com/RFMD

Absolute Maximum Ratings

Parameter	Rating	Unit
Drain Bias Voltage (V_{CTRL})	-10	V_{DC}
RF Port Power	+21	dBm
Storage Temperature	-55 to +150	°C
Operating Temperature	-55 to +85	°C
ESD JESD22-A114 Human Body Model (HBM)	Class 1A (All pads)	

Caution! ESD sensitive device.

Exceeding any one or a combination of the Absolute Maximum Rating conditions may cause permanent damage to the device. Extended application of Absolute Maximum Rating conditions to the device may reduce device reliability. Specified typical performance or functional operation of the device under Absolute Maximum Rating conditions is not implied.

The information in this publication is believed to be accurate and reliable. However, no responsibility is assumed by RF Micro Devices, Inc. ("RFMD") for its use, nor for any infringement of patents, or other rights of third parties, resulting from its use. No license is granted by implication or otherwise under any patent or patent rights of RFMD. RFMD reserves the right to change component circuitry, recommended application circuitry and specifications at any time without prior notice.

RFMD Green: RoHS compliant per EU Directive 2002/95/EC, halogen free per IEC 61249-2-21, < 1000 ppm each of antimony trioxide in polymeric materials and red phosphorus as a flame retardant, and <2% antimony in solder.

Parameter	Specification			Unit	Condition
	Min.	Typ.	Max.		
Operating Frequency	DC		25	GHz	
Insertion Loss (0GHz to 5GHz)		1.0	1.6	dB	ON State, All Temps
Insertion Loss (5GHz to 10GHz)		1.25	2.5	dB	ON State, All Temps
Insertion Loss (10GHz to 15GHz)		1.6	2.6	dB	ON State, All Temps
Insertion Loss (15GHz to 20GHz)		1.9	3.0	dB	ON State, All Temps
Insertion Loss (20 GHz to 25 GHz)		2.7	3.8	dB	ON State, All Temps
Isolation (DC to 25GHz)	30	45		dB	OFF State, All Temps
Input Return Loss (DC to 25GHz)	8	20		dB	ON State, All Temps
Input Return Loss (DC to 25GHz)	5	10		dB	OFF State, All Temps
Output Return Loss (DC to 25GHz)	8	20		dB	ON State, All Temps
Output Return Loss (DC to 25GHz)	5	10		dB	OFF State, All Temps
OIP3 (2GHz to 20GHz)	39	47		dBm	100MHz spacing, 2dBm input, 25 °C
OIP2 (4GHz to 20GHz)	86	91		dBm	100MHz spacing, 2dBm input, 25 °C
Switching Speed		23	28	ns	50% control to 90% RF, All Temps
Control Current		6	15	µA	Sum of all control lines, 25 °C
Control Voltage		0/-5		V	

7628 Thorndike Road, Greensboro, NC 27409-9421 · For sales or technical support, contact RFMD at (+1) 336-678-5570 or customerservice@rfmd.com.

www.BDTIC.com/RFMD

Insertion Loss vs. Temp (Vcontrol = -5V)

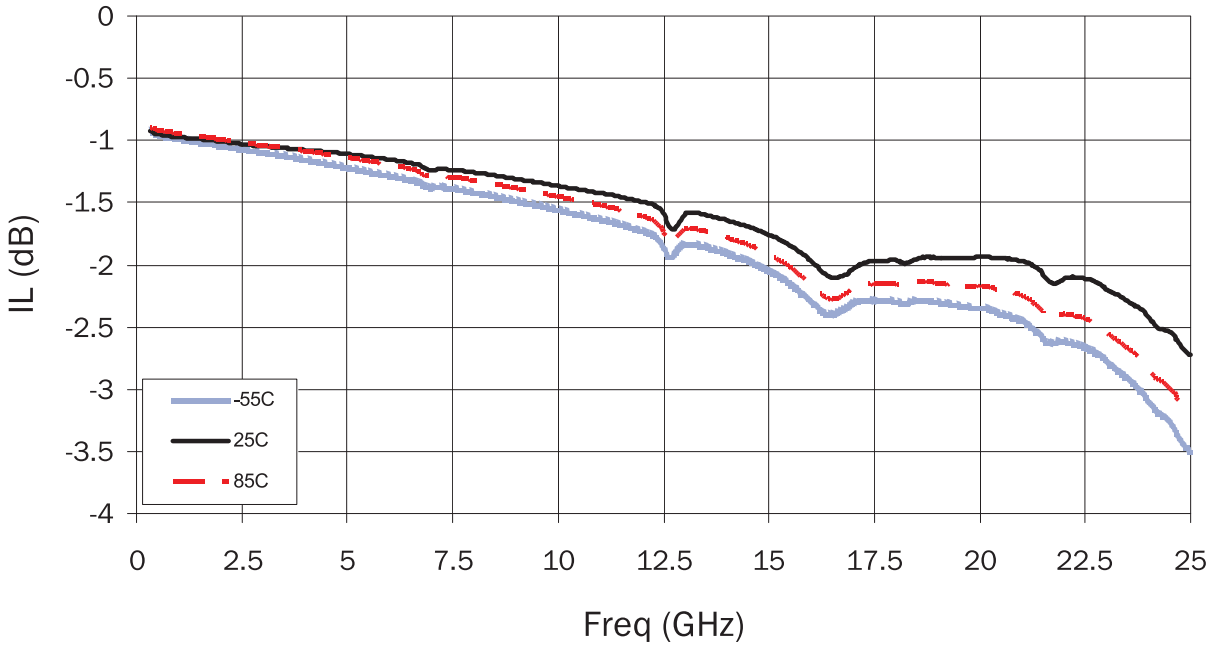

Isolation vs. Temp (Vcontrol = -5V)

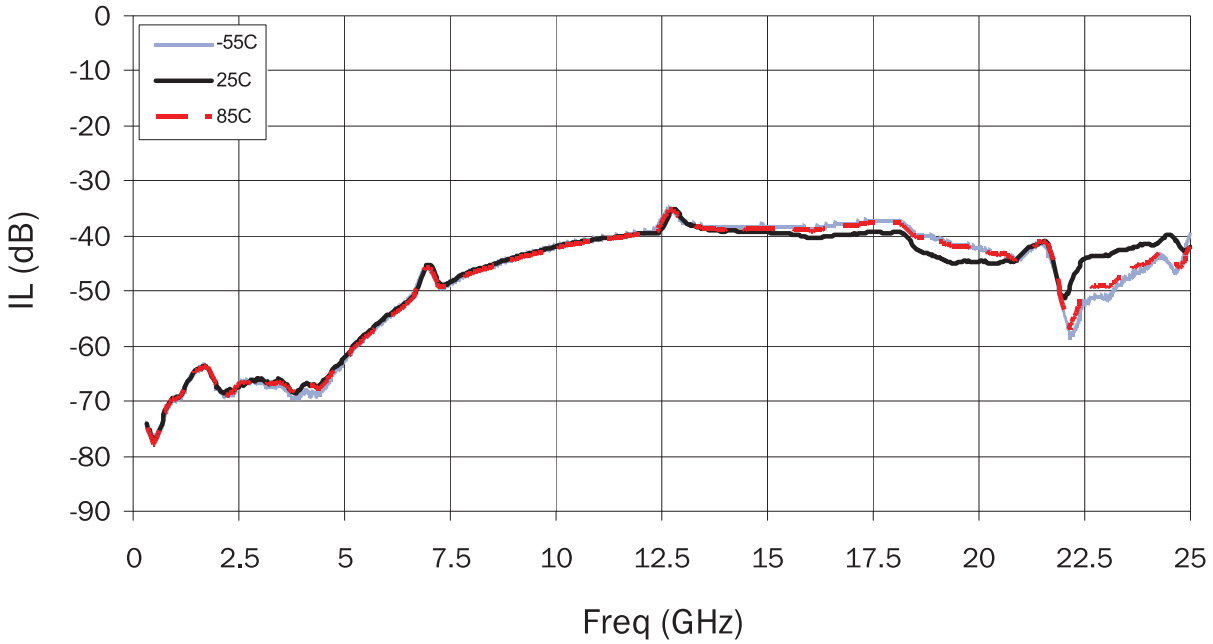

www.BDTIC.com/RFMD

Input Return Loss vs. Temp (RFOn, Vcontrol = -5V)

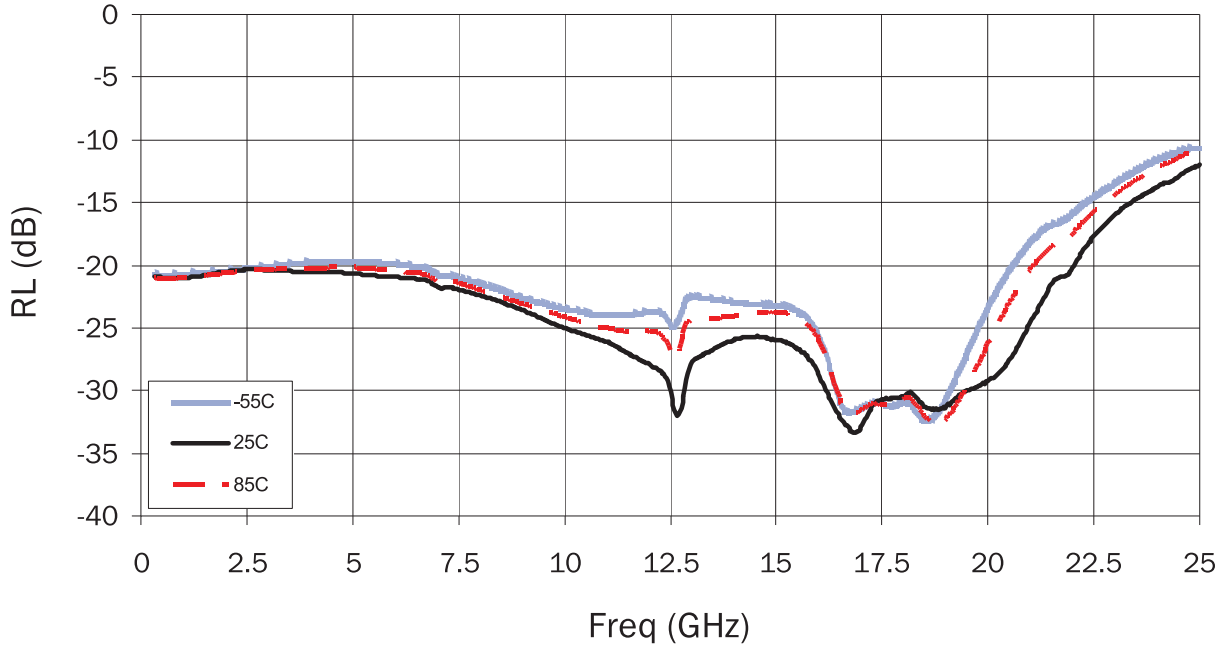

Input Return Loss vs. Temp (RFOff, Vcontrol = -5V)

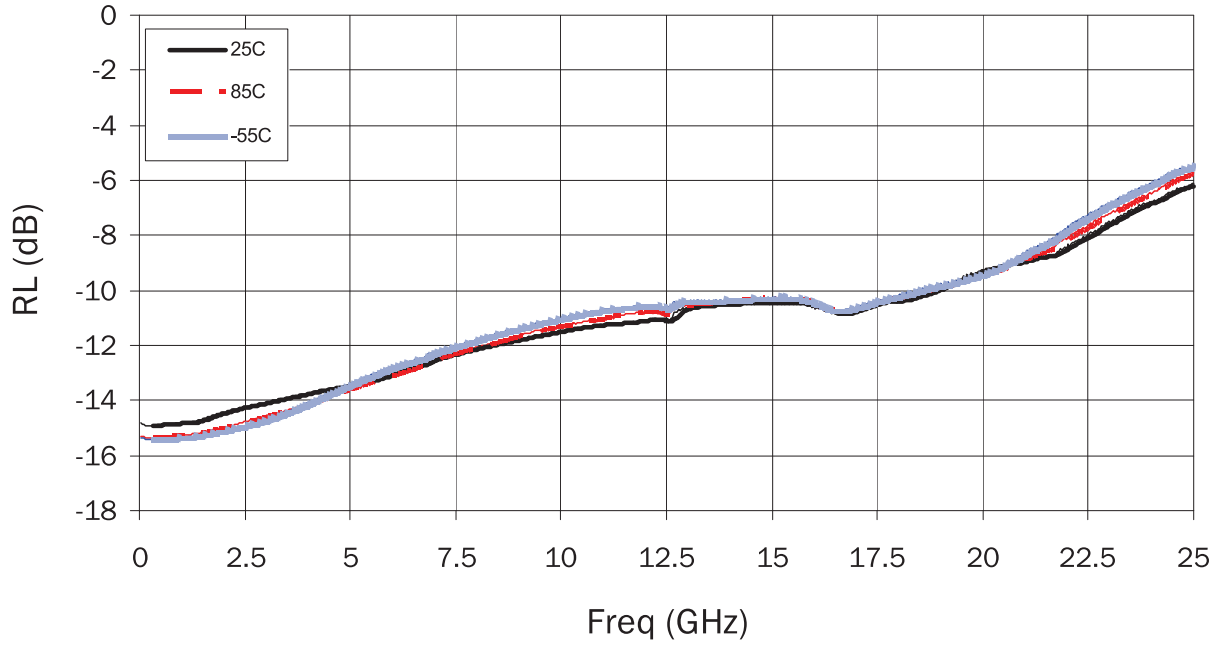

7628 Thorndike Road, Greensboro, NC 27409-9421 · For sales or technical support, contact RFMD at (+1) 336-678-5570 or customerservice@rfmd.com.

www.BDTIC.com/RFMD

Output Return Loss vs. Temp (RFOn, Vcontrol = -5V)

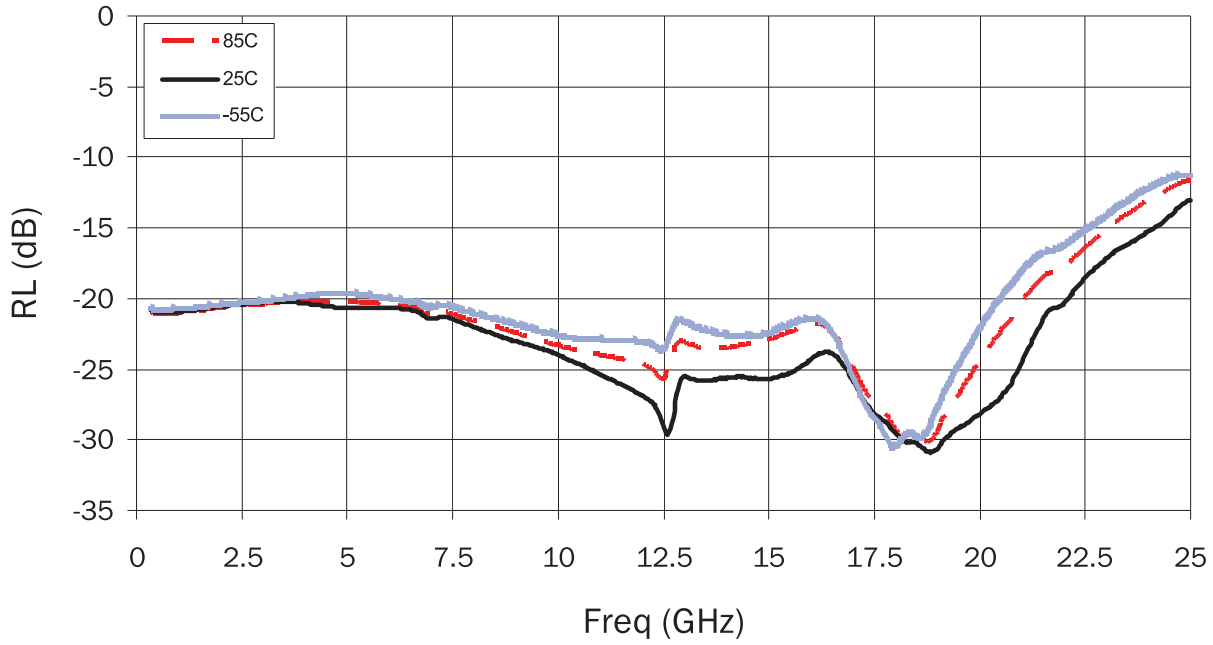

Output Return Loss vs. Temp (RFOff, Vcontrol = -5V)

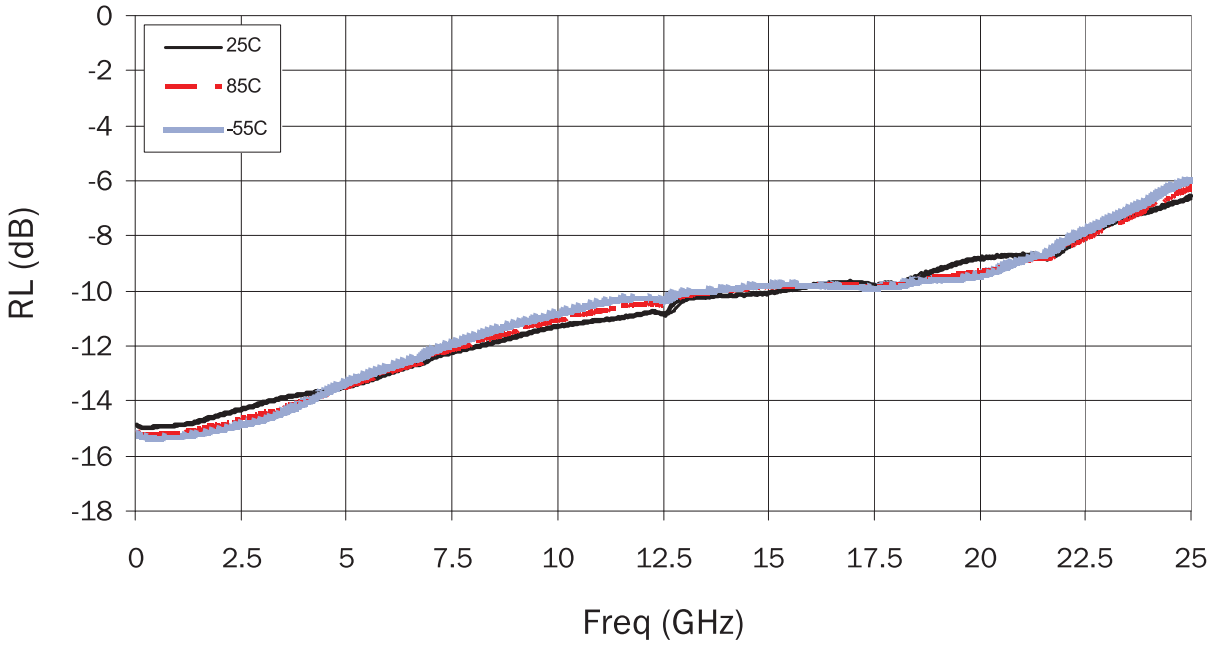

www.BDTIC.com/RFMD

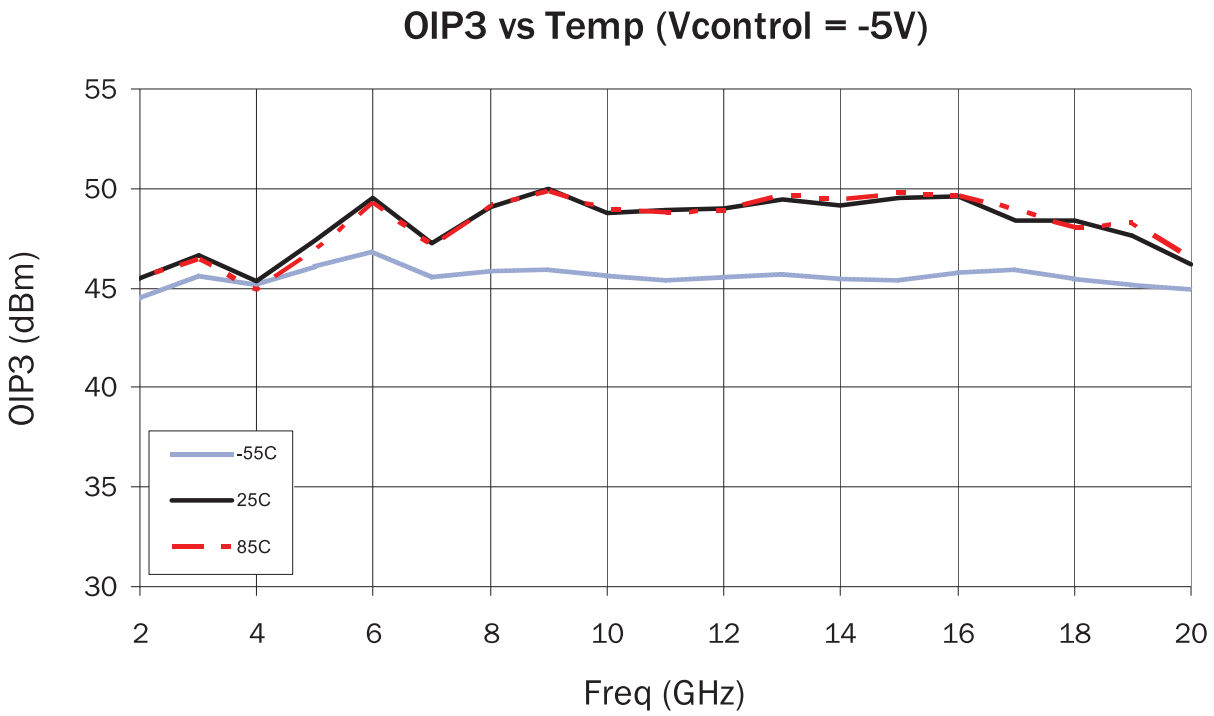

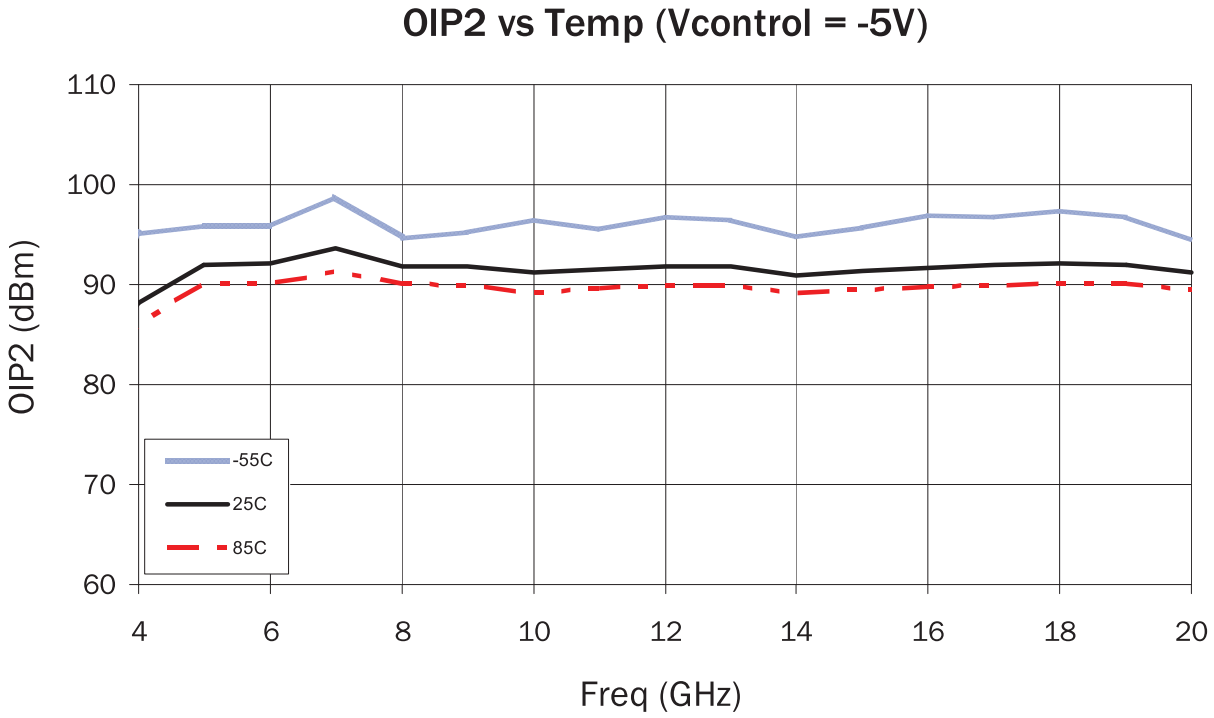

7628 Thorndike Road, Greensboro, NC 27409-9421 · For sales or technical support, contact RFMD at (+1) 336-678-5570 or customerservice@rfmd.com.

www.BDTIC.com/RFMD

Pin Names and Descriptions

Pin	Name	Description	Interface Schematic
1, 2, 3, 4, 5, 9, 12, 16	NC	No Connect	
6, 8, 13, 15	GND	Ground. Grounding via should be located as close as possible to this pin.	
14	RFOut	RF output. These pins are DC coupled and matched to 50Ω from DC to 25GHz.	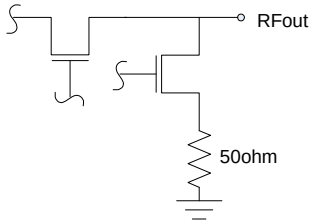
10, 11	DC	DC control for switch operation. Nominal operating voltage is -5V.	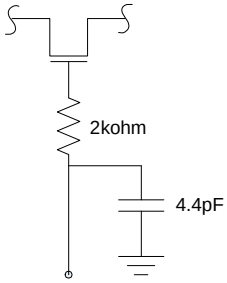
7	RFIN	RF input. This pin is DC coupled and matched to 50Ω from DC to 25GHz.	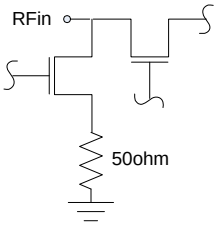

Truth Table

High = -5V ± 0.2V, Low = 0V, ± 0.2V

Control Line		RF Path
V1	V2	RFIn - RFOut
High	Low	ON (low loss)
Low	High	OFF (high isolation)

www.BDTIC.com/RFMD

Package Drawing

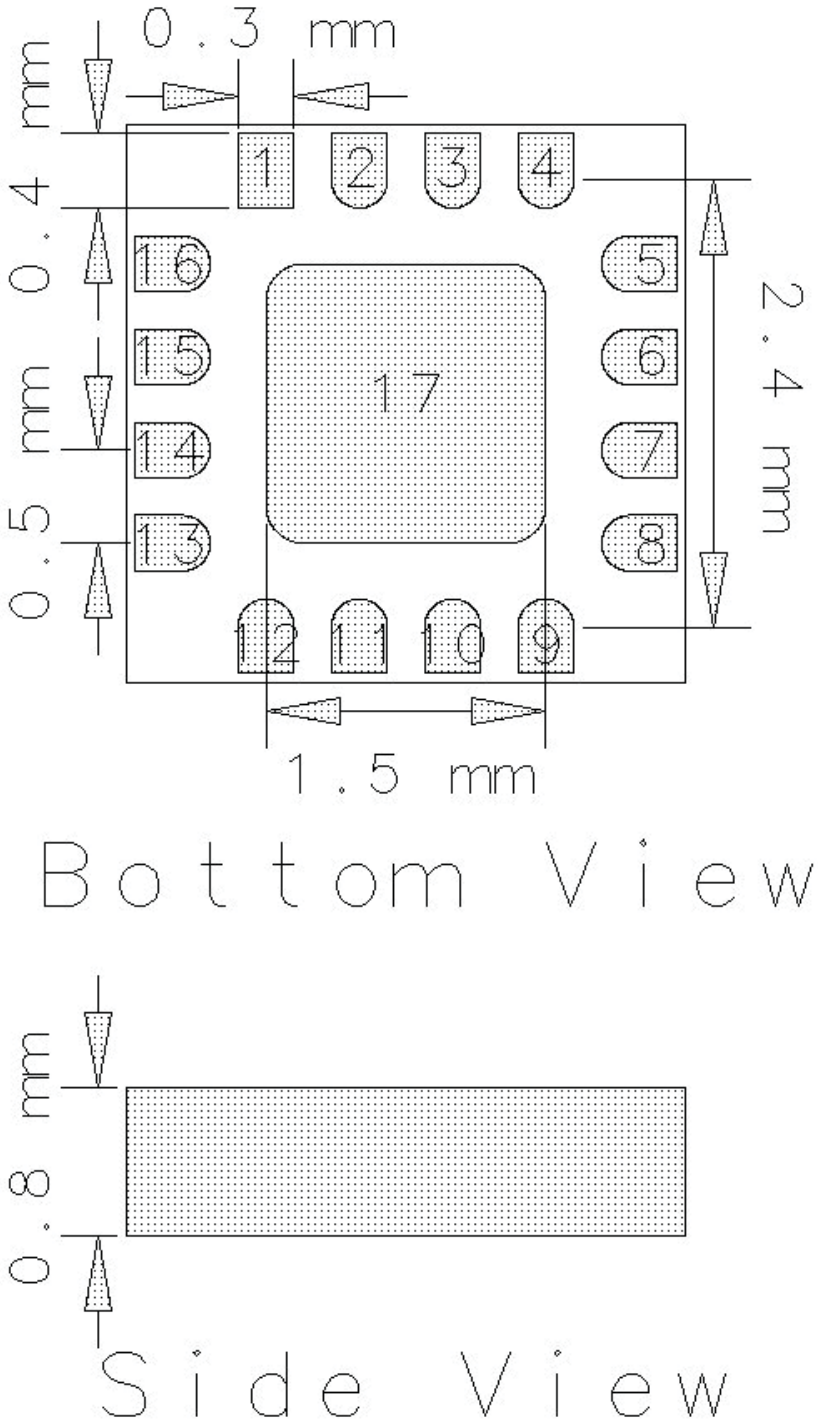

Maximum Height = 1.0mm
Dimensional Tolerance = +0.05mm

7628 Thorndike Road, Greensboro, NC 27409-9421 · For sales or technical support, contact RFMD at (+1) 336-678-5570 or customerservice@rfmd.com.

www.BDTIC.com/RFMD

Application Schematic

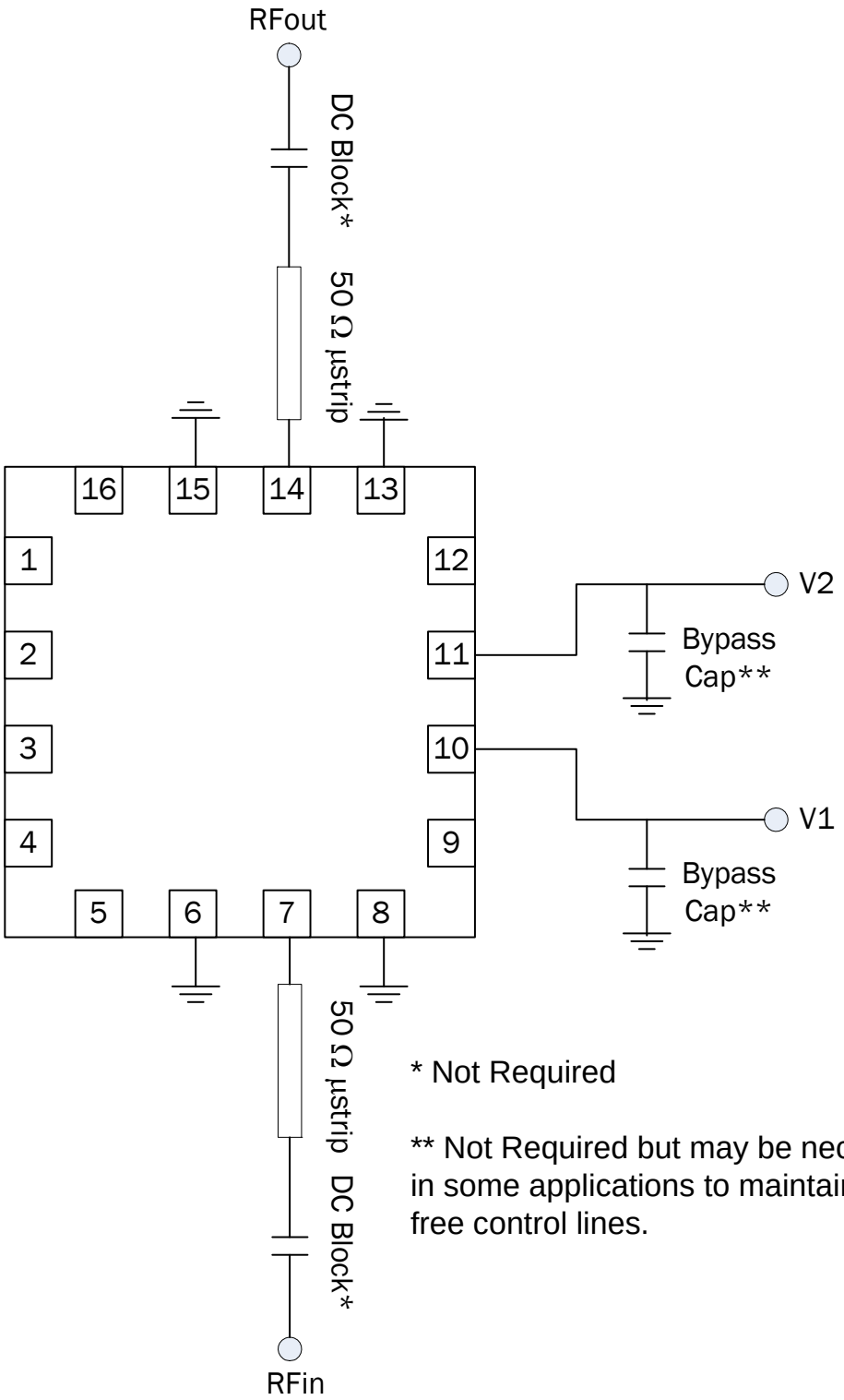

* Not Required

** Not Required but may be necessary in some applications to maintain noise free control lines.

www.BDTIC.com/RFMD

Evaluation Board Schematic

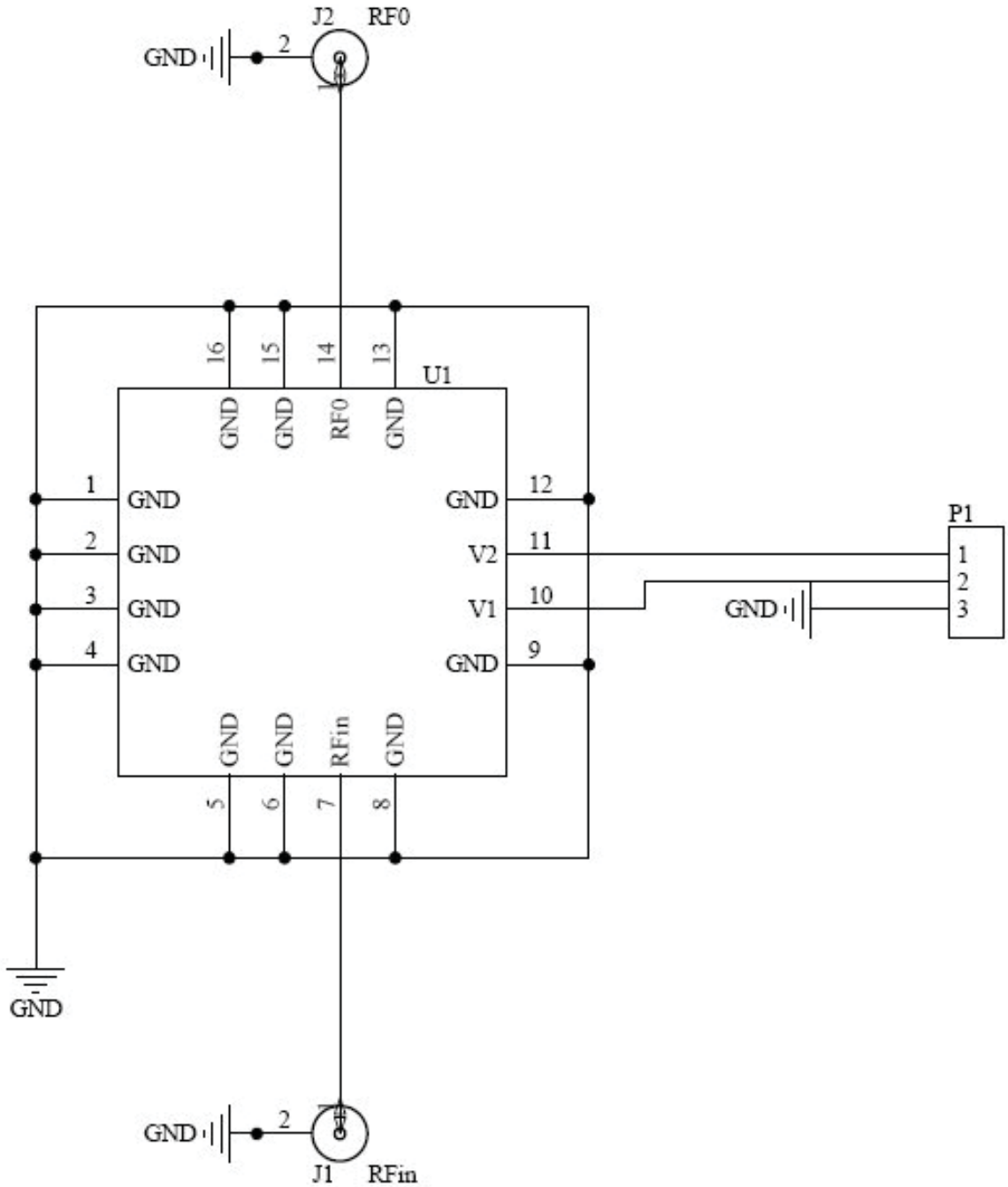

7628 Thorndike Road, Greensboro, NC 27409-9421 · For sales or technical support, contact RFMD at (+1) 336-678-5570 or customerservice@rfmd.com.

www.BDTIC.com/RFMD

Evaluation Board Layout

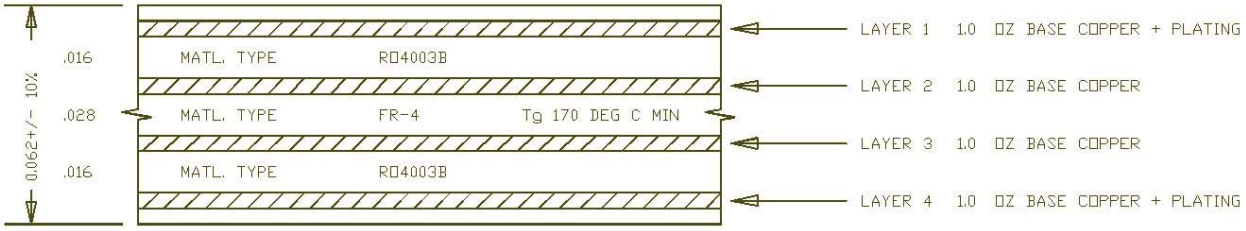

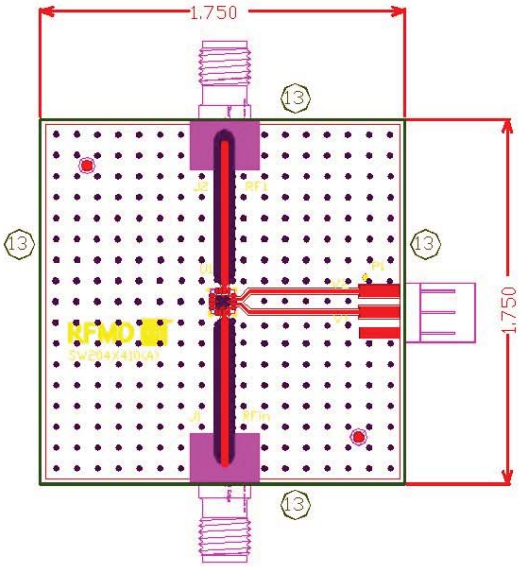

www.BDTIC.com/RFMD