RFMD.

WiFi Switch and LNA Front End Solutions

RFMD®

Mobility. Connectivity. Energy.

www.BDTIC.com/RFMD

WiFi Switch Front End Solutions

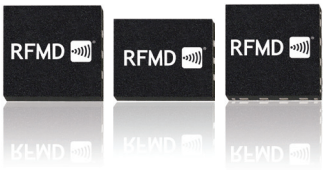

RFMD offers a wide selection of broadband high-performance symmetric switches suitable for applications in the cellular and non-cellular space. Covering single-pole double-throw (SPDT) and single-pole triple-throw (SP3T), these products are ideal for use in high-performance and space-constrained applications. Typical applications include cellular band switching, antenna switching, antenna tuning, and other areas requiring high-performance signal routing.

FEATURES

- **Excellent insertion loss**
- **High isolation**
- **Low voltage operation**
- **Very low current consumption**
- **Broadband operation across multiple frequency bands and applications**
- **Ideal for 2.5GHz ISM band, portable battery-powered, and WiFi/*Bluetooth*® combination devices**

SPECIFICATIONS

Switch Type	*Control Lines*	*Freq Range (MHz)*	*P0.1dB (dBm)*	*Control Voltage (V)*	*Insertion Loss (dB)*	*Isolation (dB)*	*IIP2 (dBm)*	*IIP3 (dBm)*	*Package (dim. in mm)*	*Sample Availability*	*Notes*	*Part Number*
SPDT	2	DC to 6000	23	0 / +3.0	0.26	27	96	62	2.0 x 1.3 x 0.38	NOW	—	RF1126
	1	DC to 3500	23	0 / +1.8	0.45	29	100	65	2.0 x 1.3 x 0.38	NOW	—	RF1127
	1	10 to 6000	27	0 / +3.0	0.55	58	—	50	3.0 x 3.0 x 0.60	NOW	—	RF3021
	1	DC to 6000	27	0 / +3.0	0.5	>32	—	50	3.0 x 3.0 x 0.60	NOW	—	RF3025
	1	DC to 3000	28	0 / +2.7	0.25	27	—	60	2.0 x 1.25 x 0.80	NOW	—	RF3023
	1	DC to 3000	28	0 / +2.7	0.25	27	—	60	2.0 x 1.25 x 0.80	NOW	—	RF3024
	2	DC to 3500	32	0 / +2.85	0.35	27	111	67	2.0 x 1.3 x 0.38	NOW	—	RF1128
	2	DC to 2500	37	0 / +2.6	0.3	26	118	—	2.0 x 2.0 x 0.85	NOW	—	RF1200
	1	DC to 3500	37	0 / +1.8	0.26	40	125	74	2.0 x 2.0 x 0.55	NOW	Direct connect to V_{BATT}; No DC blocks required	RF1602*
	2	DC to 2500	37	0 / +2.5	0.5	>30	—	—	2.0 x 2.0 x 0.85	NOW	—	FMS2014
	2	100 to 6500	40	0 / +2.8	0.5	30	—	—	2.0 x 2.0 x 0.60	NOW	—	RFSW8000
	2	DC to 2500	41	0 / +2.6	0.3	26	118	—	2.0 x 2.0 x 0.85	NOW	—	RF1201
	2	DC to 6000	41	0 / +6.0	0.55	32	87	60	3.0 x 3.0 x 0.85	NOW	—	FMS2031
	2	DC to 6000	42	0 / +2.7	1	25	—	68	3.0 x 3.0 x 0.85	NOW	—	FMS2016
SP3T	3	DC to 3000	28	0 / +1.65	0.6	18	—	—	2.0 x 2.0 x 0.50	NOW	—	RF5840
	2	DC to 3500	29	0 / +1.8	0.25	28	110	63	2.5 x 2.5 x 0.55	NOW	No DC blocks required	RF1136
	3	DC to 3000	29	0 / +2.5	0.6	18	—	—	2.0 x 2.0 x 0.50	NOW	—	RF5500
	3	DC to 3000	29	0 / +2.5	0.6	25	—	—	2.0 x 2.0 x 0.50	NOW	—	RF5570
	3	10 to 6000	31	0 / +3.0	0.5	27	—	56	1.0 x 1.0 x 0.55	NOW	—	RFSW6131
	3	2400 to 2500	28	2.5 to 5.0	0.6	25	—	45	1.5 x 1.5 x 0.35	NOW	—	RFSW8001
	3	DC to 2500	37	0 / +2.6	0.3	32	—	62	2.0 x 2.0 x 0.55	NOW	—	RF1131
	3	DC to 2500	37	0 / +2.6	0.48	30	—	67	2.0 x 2.0 x 0.55	NOW	—	RF1132
	2	DC to 2500	38	0 / +1.8	0.3	29	114	70	3.0 x 3.0 x 0.55	NOW	No DC blocks required	RF1130
	2	DC to 3500	38	0 / +1.8	0.4	35	120	73	2.5 x 2.5 x 0.55	NOW	No DC blocks required	RF1603A
SP4T	2	DC to 2500	29	0 / +1.8	0.3	29	106	63	3.0 x 3.0 x 0.45	NOW	No DC blocks required	RF1146
	2	DC to 3500	29	0 / +1.8	0.3	29	106	63	3.0 x 3.0 x 0.45	NOW	No DC blocks required	RF1147
	2	DC to 2500	38	0 / +1.8	0.4	29	128	—	3.0 x 3.0 x 0.90	NOW	—	RF1450
	2	DC to 2500	38	0 / +1.8	0.3	28	110	70	3.0 x 3.0 x 0.55	NOW	No DC blocks required	RF1140
	2	DC to 3500	38	0 / +1.8	0.4	35	115	73	2.5 x 2.5 x 0.55	NOW	No DC blocks required	RF1604
DPDT	2	10 to 6000	34	0 / +3.0	0.65	35	—	56	3.0 x 3.0 x 0.55	NOW	—	RF6223
1 x 2	5	700 to 3800	40	0 / +2.8	Tx 1.2 Rx 0.7	28	—	—	4.0 x 4.0 x 0.9	NOW	Smart antenna solution	RF5620

Generic SP3T

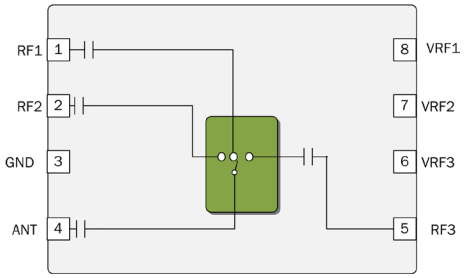

Generic SPDT

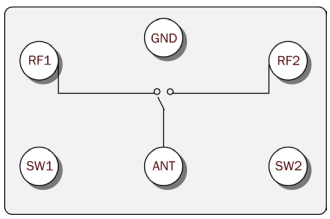

RF5620

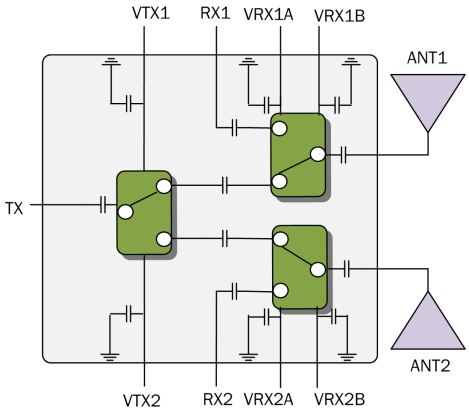

www.BDTIC.com/RFMD

Low Noise Amplifier Portfolio

RFMD delivers low noise amplifiers (LNAs) for a range of digital cellular, WiFi, and WiMAX applications. Providing high dynamic range, superior performance, and low current consumption, our portfolio of LNAs enables compact designs through various module-compatible, standard plastic flip-chip packages.

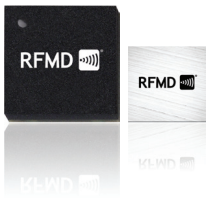

FEATURES

- High dynamic range
- Low current consumption
- Available in SOT-5 and -6 lead QFN, plastic, and flip-chip packages
- Internally matched at 50Ω (RF5515)
- Bias current may be set externally (RF2370, RF2373, RF2374)
- Low profile packages

SPECIFICATIONS

Description	*Freq (MHz)*	*Gain (dB)*	*NF (dB)*	*IP1dB (dBm)*	*V_D (V)*	*I_D (mA)*	*Package Style*	*Part Number*
Broadband LNA w/bypass mode	900 to 4000	14	1.3	-5.0	3.3	10	QFN-8, 2.2 x 2.2mm	RF2374
Broadband LNA w/bypass mode	900 to 4000	14	1.3	-5.0	3.3	10	SOT-6 lead	RF2370
Broadband LNA	400 to 3000	15	1.3	-3.5	3.3	10	SOT-5 lead	RF2373
Broadband LNA	DC to 4000	14	1.2	-5.0	3.3	10	SOT-343	SGA-8343
Broadband LNA	DC to 6000	14	1.5	-8.0	2.7 to 4.8	6	SOT-5 lead	RF2472
5GHz LNA w/bypass	4900 to 5900	11	1.6	-2.0	2.3 to 4.8	12	QFN-8, 2.2 x 2.2 x 0.45mm	RF5601
5GHz LNA	4900 to 5900	11	1.6	-2.0	2.3 to 4.8	12	QFN-8, 2.2 x 2.2 x 0.45mm	RF5515

RF2370

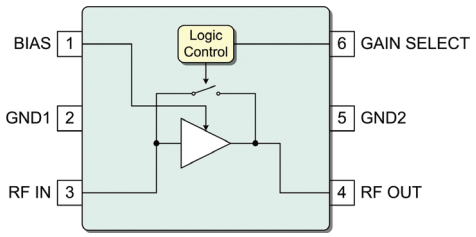

RF2373

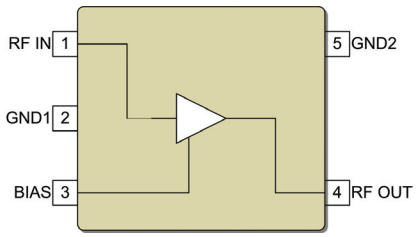

RF5601

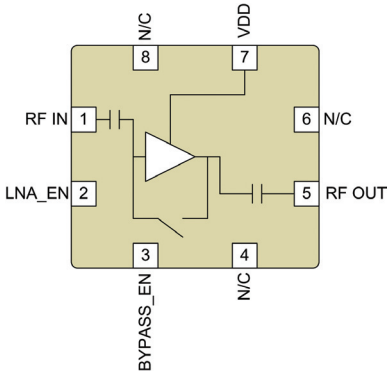

RF5515

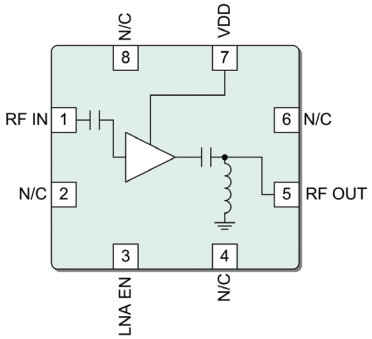

www.BDTIC.com/RFMD

WiFi Switch + LNA Front End Solutions

RFMD offers a range of switch and switch + LNA front end solutions designed specifically for high-performance WiFi applications operating in the 2.4GHz to 2.5GHz ISM band. Some of these applications include personal media players (PMPs), digital cameras, and WiFi-enabled handsets.

Two of the switch + LNA front end solutions—the RF5501 and RF5511—address the need for size reduction for a typical IEEE 802.11b/g/n front end design. Featuring an integrated SP3T switch and a low noise amplifier, these flip-chip MMICs also reduce the number of components required outside of the core chipset.

FEATURES

- **Single supply voltage 3.0V to 4.5V**
- **Integrated SP3T switch and low noise amplifier**
- **Typical gain is 12dB and 1.7dB noise figure in receive mode pin-to-pin**
- **SP3T switch control voltage 2.1 to 5V (3.0V typical)**
- **Ideal for 2.5GHz ISM band, portable battery-powered, and WiFi/*Bluetooth*® combination devices**

SPECIFICATIONS

Freq Range (MHz)	*Switch*	*LNA Gain (dB)*	*NF (dB)*	*Switch Insertion Loss (dB)*	*Switch P1dB (dBm)*	*OP1dB (dBm)*	*OIP3 (dBm)*	*IIP3 (dBm)*	*V_{CC} (V)*	*I_{CC} (mA)*	*RF Ports DC Blocked*	*Package (mm)*	*Part Number*
2400 to 2500	SP3T	11.5	1.9	0.6	29	5	19	7	3.0 to 4.5	9	No	QFN 2.0 x 2.0 x 0.5	RF5501
2400 to 2500	SP3T	11.5	1.9	0.6	29	5	19	7	3.0 to 4.5	9	No	QFN 1.75 x 1.75 x 0.5	RF5521
2400 to 2500	SP3T	11.0	2.2	0.8	29	5	19	7	3.0 to 4.5	9	Yes	QFN 2.0 x 2.0 x 0.5	RF5611
4900 to 5850	SPDT	13.0	2.3	0.8	29	5	19	7	3.0 to 4.5	15	No	QFN 2.0 x 2.0 x 0.5	RF5540

RF5501/RF5511/RF5521

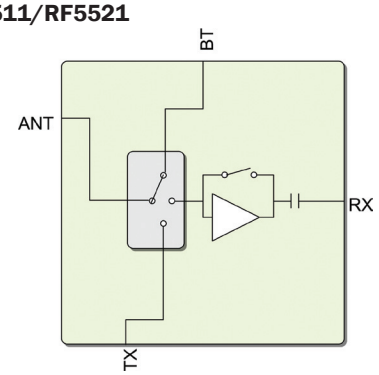

RF5540

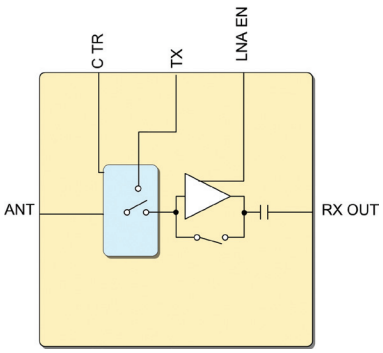

MPG.Switch-LNA.0212.100

RFMD® is a trademark of RFMD, LLC. All other trade names, trademarks and registered trademarks are the property of their respective owners. ©2012 RFMD.

RFMD®

Mobility. Connectivity. Energy.

www.BDTIC.com/RFMD