STEVAL-ILL042V1

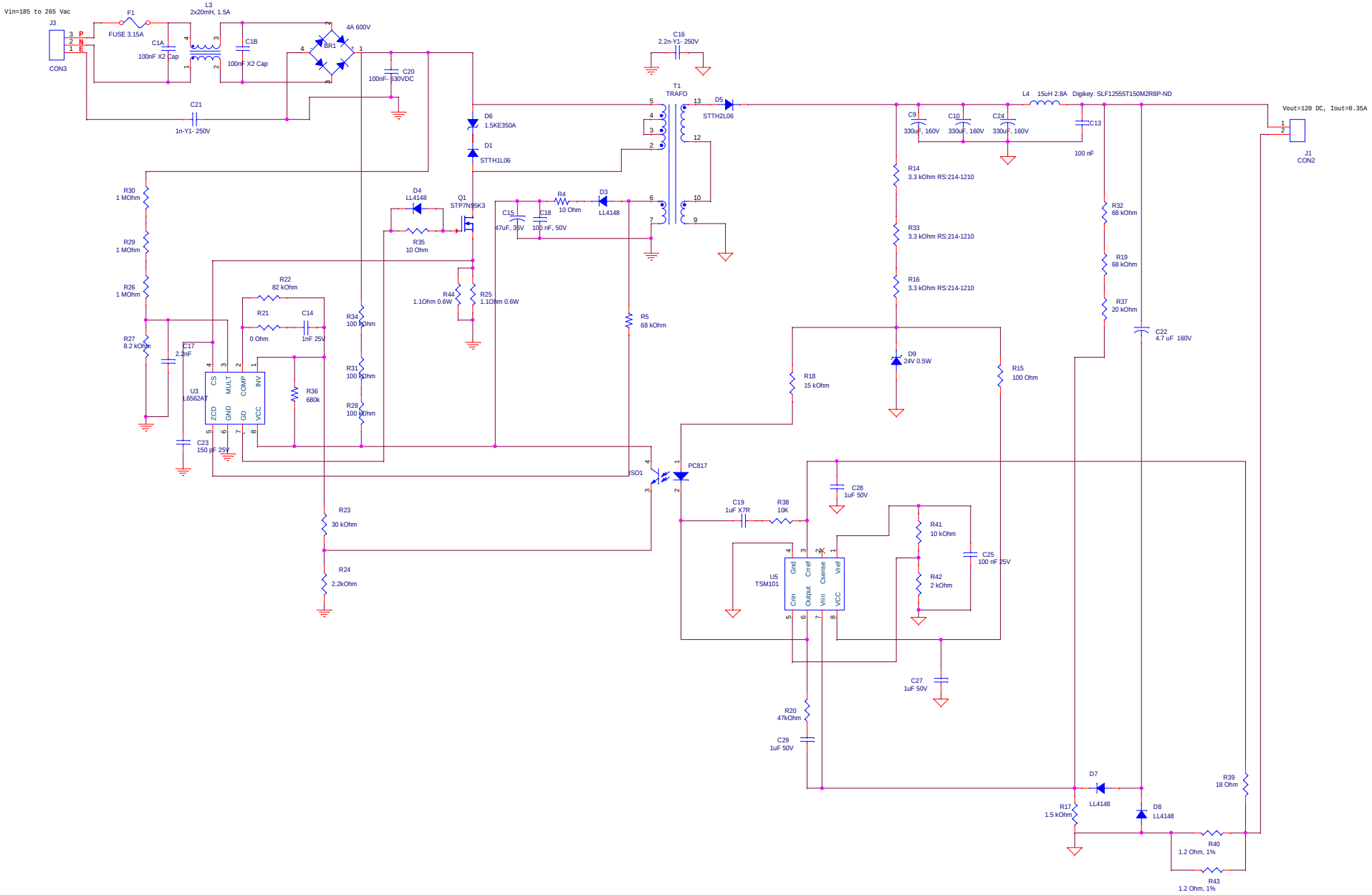

www.BDTIC.com/ST