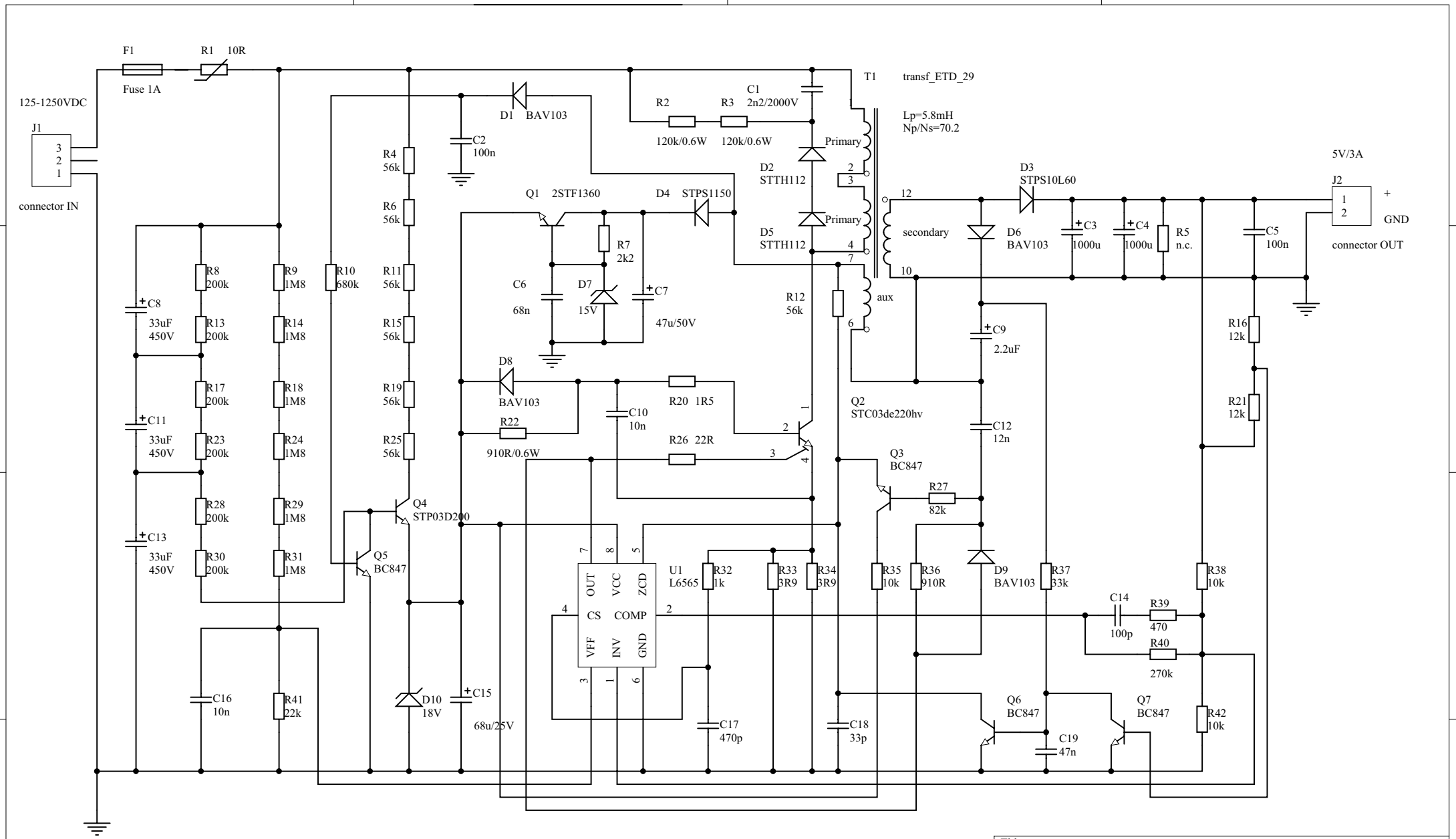

Title		
STEVAL-ISA057V1 15 W SMPS for metering		
Size A4	Number	Revision 1.3
Date: 9/15/2008		Sheet of
File:		Drawn By:

www.BDTIC.com/ST