STEVAL-CCA011V1 DEMOBOARD

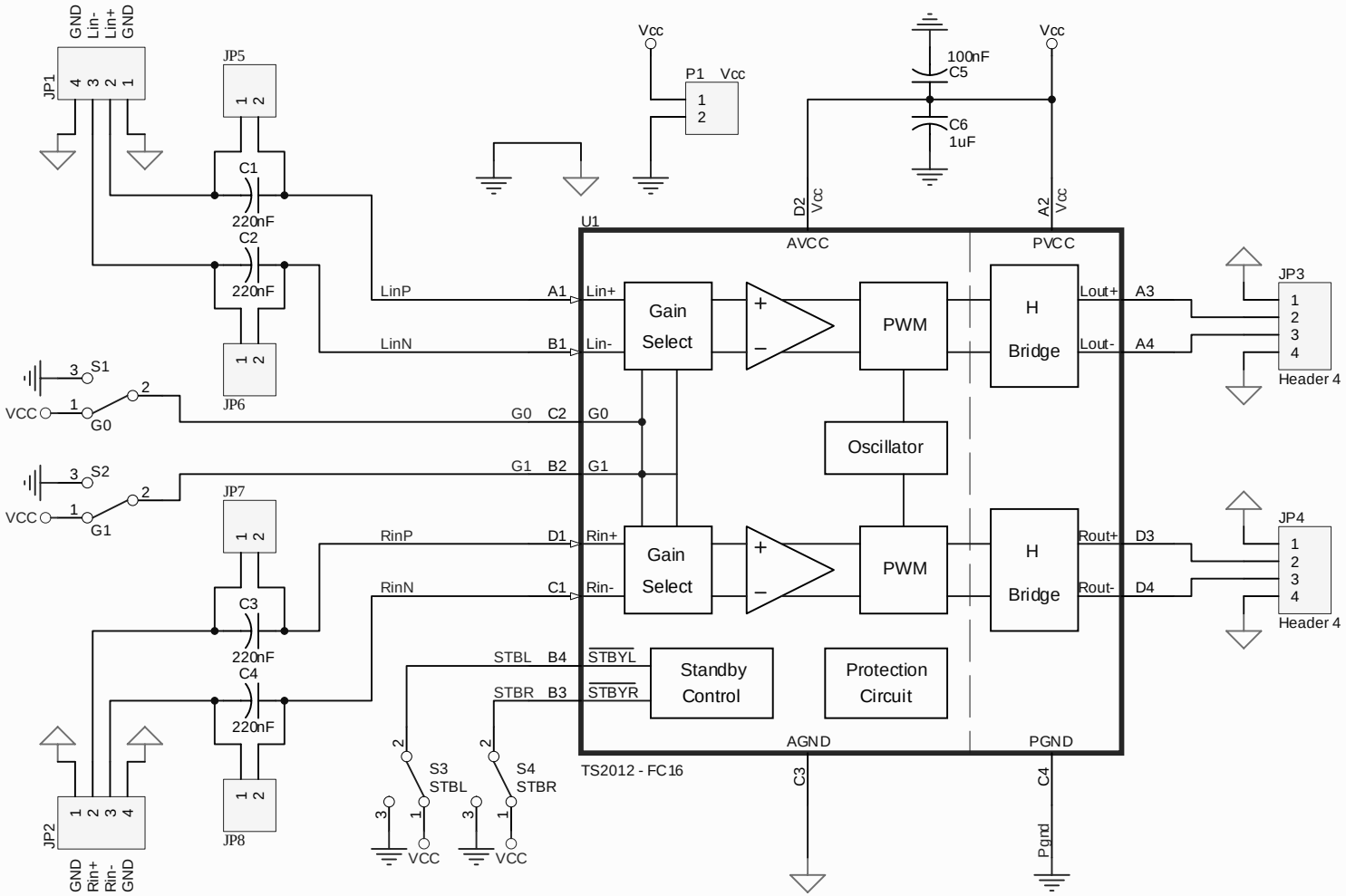

www.BDTIC.com/ST