REVISION				
REV	DESCRIPTION	ECO	DATE	BY/APPD
1	REMOVED VIEW A. CHG'D FORMAT	-	02-10-14	GCM/JST

NOTES:

1. DIMENSIONS AND TOLERANCING PER ASME Y14.5M-1194. PACKAGE CONFORMS TO JEDEC MO-203, ISSUE B.
2. DIMENSIONS ARE IN MILLIMETERS (INCHES).
3. DIMENSION D DOES NOT INCLUDE MOLD FLASH, PROTRUSIONS OR GATE BURRS. MOLD FLASH, PROTRUSIONS OR GATE BURRS SHALL NOT EXCEED 0.15 mm PER END. DIMENSION E1 DOES NOT INCLUDE INTERLEAD FLASH OR PROTRUSION. INTERLEAD FLASH OR PROTRUSION SHALL NOT EXCEED 0.15 mm PER SIDE. D AND E1 DIMENSIONS ARE DETERMINED AT DATUM H.
4. THE PACKAGE TOP MAY BE SMALLER THAN THE PACKAGE BOTTOM. DIMENSIONS D AND E1 ARE DETERMINED AT THE OUTERMOST EXTREMES OF THE PLASTIC BODY EXCLUSIVE OF MOLD FLASH, TIE BAR BURRS, GATE BURRS AND INTERLEAD FLASH, BUT INCLUDING ANY MISMATCH BETWEEN THE TOP AND THE BOTTOM OF THE PLASTIC BODY. D AND E1 DIMENSIONS ARE DETERMINED AT DATUM H.
5. DATUM A & B TO BE DETERMINED AT DATUM H.
6. DIMENSION 'b' DOES NOT INCLUDE DAMBAR PROTRUSION. ALLOWABLE DAMBAR PROTRUSION SHALL BE 0.08 mm TOTAL IN EXCESS OF THE "b" DIMENSION AT MAXIMUM MATERIAL CONDITION. THE DAMBAR IS NOT LOCATED ON THE LOWER RADIUS OF THE FOOT. MINIMUM SPACE BETWEEN PROTRUSION AND AN ADJACENT LEAD SHALL NOT BE LESS THAN 0.07 mm.

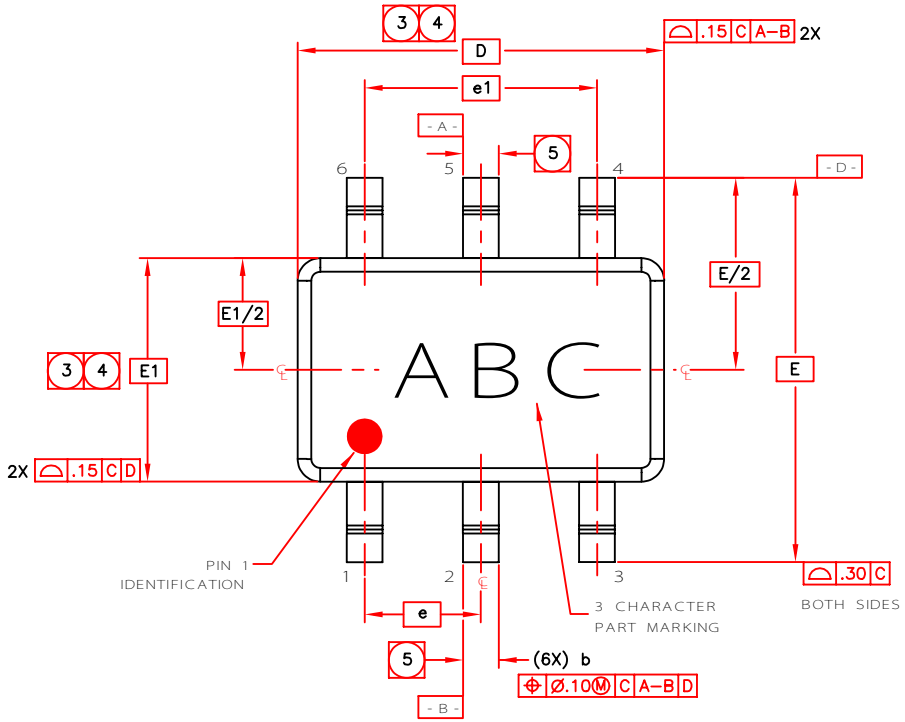

TOP VIEW

SYMBOL	MIN	MAX
A	-	1.10 (.043)
A1	0	.10 (.004)
A2	.70 (.028)	1.00 (.039)
D	2.00 (.079) BASIC	
E	2.10 (.083) BASIC	
E1	1.25 (.039) BASIC	
L	.26 (.010)	.46 (.018)
L1	.42 (.017) REF	
L2	.15 (.006) BASIC	
θ	0`8	8`8
θ1	4`8	12`8
b	.15 (.006)	.30 (.012)
c	.08 (.003)	.22 (.009)
e	.65 (.026) BASIC	
e1	1.30 (.051) BASIC	

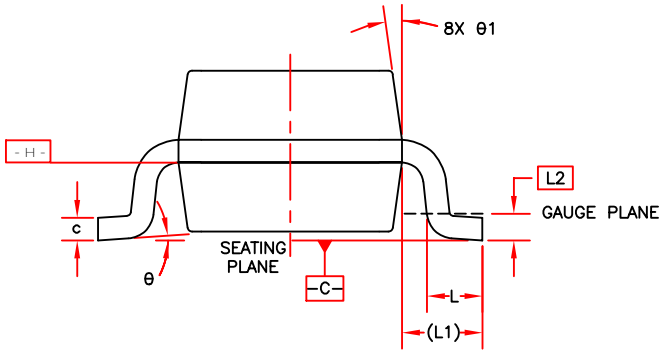

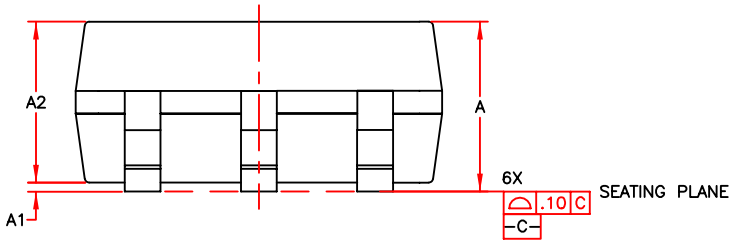

SIDE VIEW

DR G. MARLEY	02-08-23	COMMUNICATIONS, INC. PALO ALTO, CALIFORNIA
CHK		ICD, SOT-363 (SC70)
ENG J. TOBIAS	02-08-23	
MFG A. MANZI	02-09-05	
QA		SIZE C / CAGE CODE 14482 / 452685 / REV 1
TF		
CONT ID.		SCALE 2/1 / W/O NO. / SHEET 1 OF 1

INTERFACE CONTROL DRAWING

452685

WJ COMMUNICATIONS PROPRIETARY INFORMATION

www.BDTIC.com/TriQuint/