REV	DESCRIPTION	ECO	DATE	BY/APPD

REVISION

SEE SHEET 1 FOR REVISIONS

COMPONENT SIDE

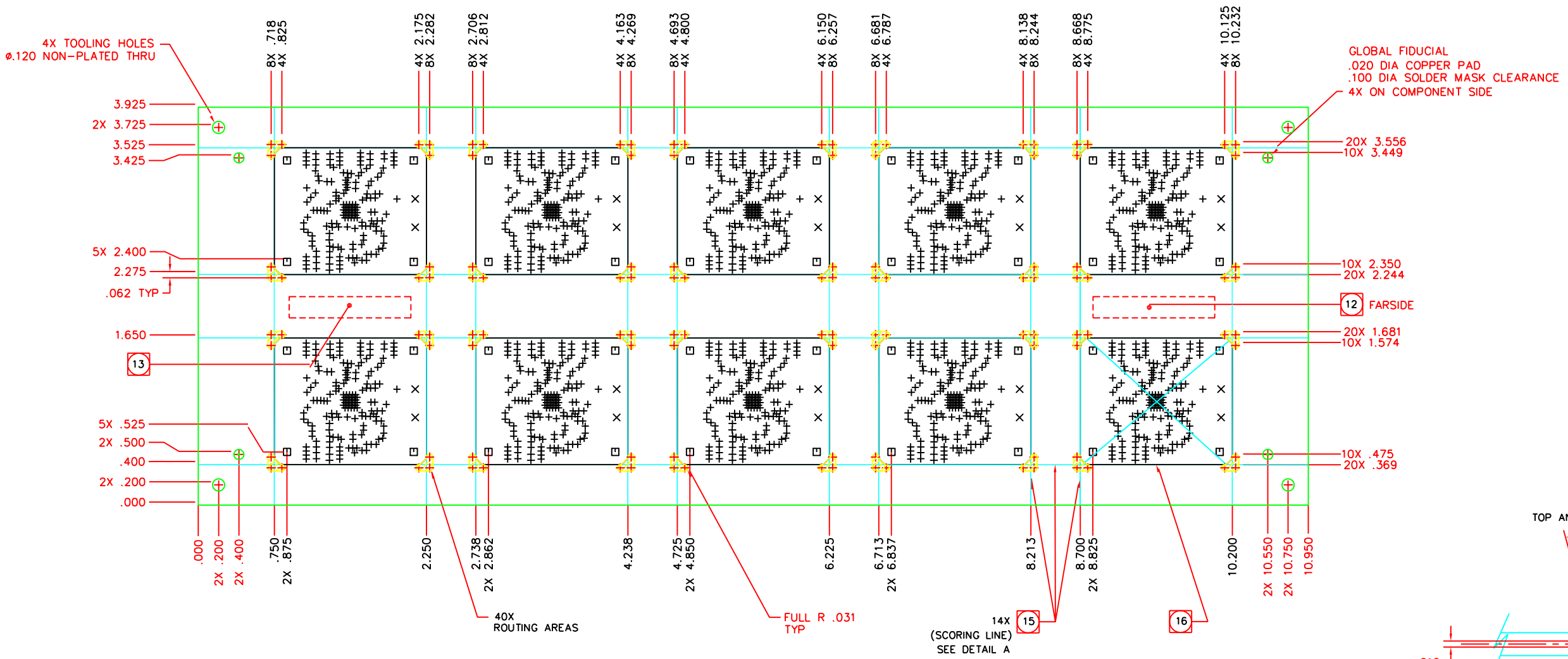

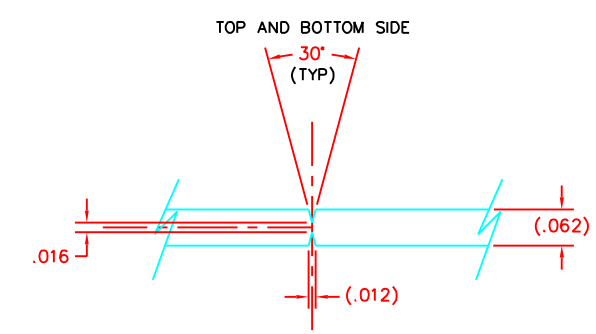

DETAIL A 15
V-GROOVE SCORING

COMMUNICATIONS, INC.
SAN JOSE, CALIFORNIA

PRINTED CIRCUIT BOARD,
SINGLE BRANCH CV

SIZE	CAGE CODE		REV
D	14482	452788PC	3

SCALE NONE W/O NO. SHEET 2 OF 2

452788PC

DSIZECON 00/08/16